Cambridge Assessment International Education

Cambridge International AS & A Level

CANDIDATE NAME

CENTRE NUMBER

CANDIDATE NUMBER

6616664707

PHYSICS **9702/33**

Paper 3 Advanced Practical Skills 1 **October/November 2020**

2 hours

You must answer on the question paper.

You will need: The materials and apparatus listed in the confidential instructions

INSTRUCTIONS

- Answer **all** questions.
- Use a black or dark blue pen. You may use an HB pencil for any diagrams or graphs.
- Write your name, centre number and candidate number in the boxes at the top of the page.
- Write your answer to each question in the space provided.
- Do **not** use an erasable pen or correction fluid.
- Do **not** write on any bar codes.
- You will be allowed to work with the apparatus for a maximum of 1 hour for each question.
- You should record all your observations in the spaces provided in the question paper as soon as these observations are made.
- You may use a calculator.
- You should show all your working and use appropriate units.

INFORMATION

- The total mark for this paper is 40.
- The number of marks for each question or part question is shown in brackets [ ].

For Examiner's Use	
1	
2	
Total	

This document has **12** pages. Blank pages are indicated.

© UCLES 2020

You may not need to use all of the materials provided.

1 In this experiment, you will investigate the equilibrium of a metre rule.

(a) Using the calipers, determine the diameter of one of the masses.

diameter = ... cm [2]

(b) ● Set up the apparatus as shown in Fig. 1.1, with the scale on the metre rule facing upwards.

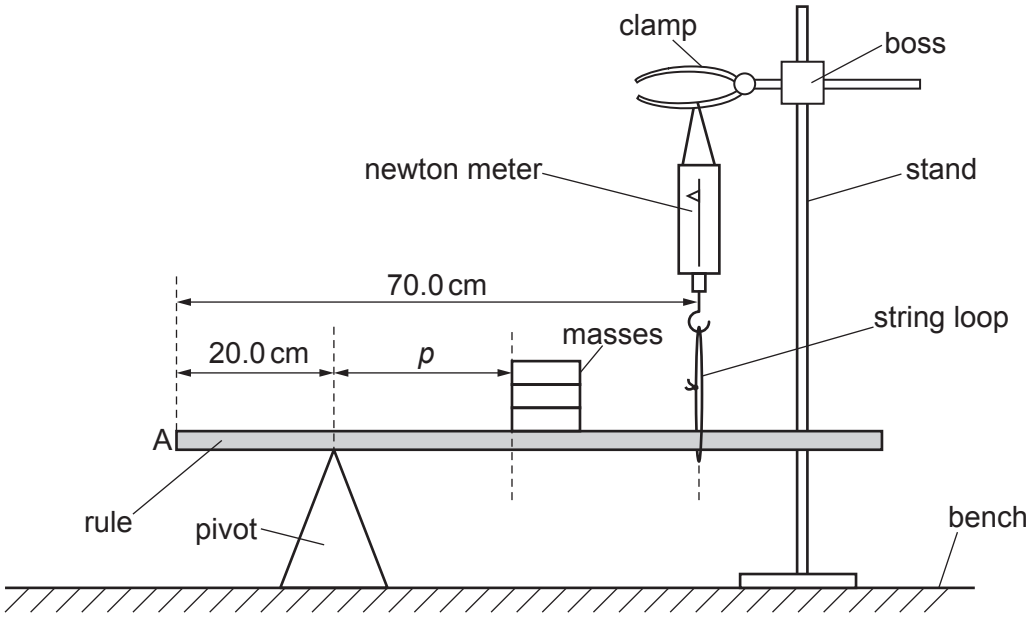

Fig. 1.1 (not to scale)

- Adjust the apparatus until the pivot is 20.0 cm from end A of the rule and the string loop is 70.0 cm from end A of the rule.
  The pivot and string loop should remain at these positions throughout the experiment.

- Place the three masses with the edge of the bottom mass approximately 37 cm from end A of the rule.

- Adjust the stand until the newton meter and string are perpendicular to the bench.

- Adjust the boss and the clamp until the rule is parallel to the bench.

- The distance from the pivot to the edge of the mass is *p*, as shown in Fig. 1.1.

  Measure and record *p*.

p = ... cm

- Measure and record the newton meter reading *F*.

F = ... N
[1]

(c) ● Using your value of diameter from **(a)**, calculate the radius r of a mass.

r = ... cm

● Vary p in the range 5.0 cm ≤ p ≤ 45.0 cm and determine six sets of readings of p and F. For each value of p, adjust the boss and clamp until the rule is parallel to the bench.

Record your values in a table. Include values of (p + r) in your table.

[8]

(d) **(i)** Plot a graph of F on the y-axis against (p + r) on the x-axis. [3]

(ii) Draw the straight line of best fit. [1]

(iii) Determine the gradient and y-intercept of this line.

gradient = ...

y-intercept = ...

[2]

© UCLES 2020

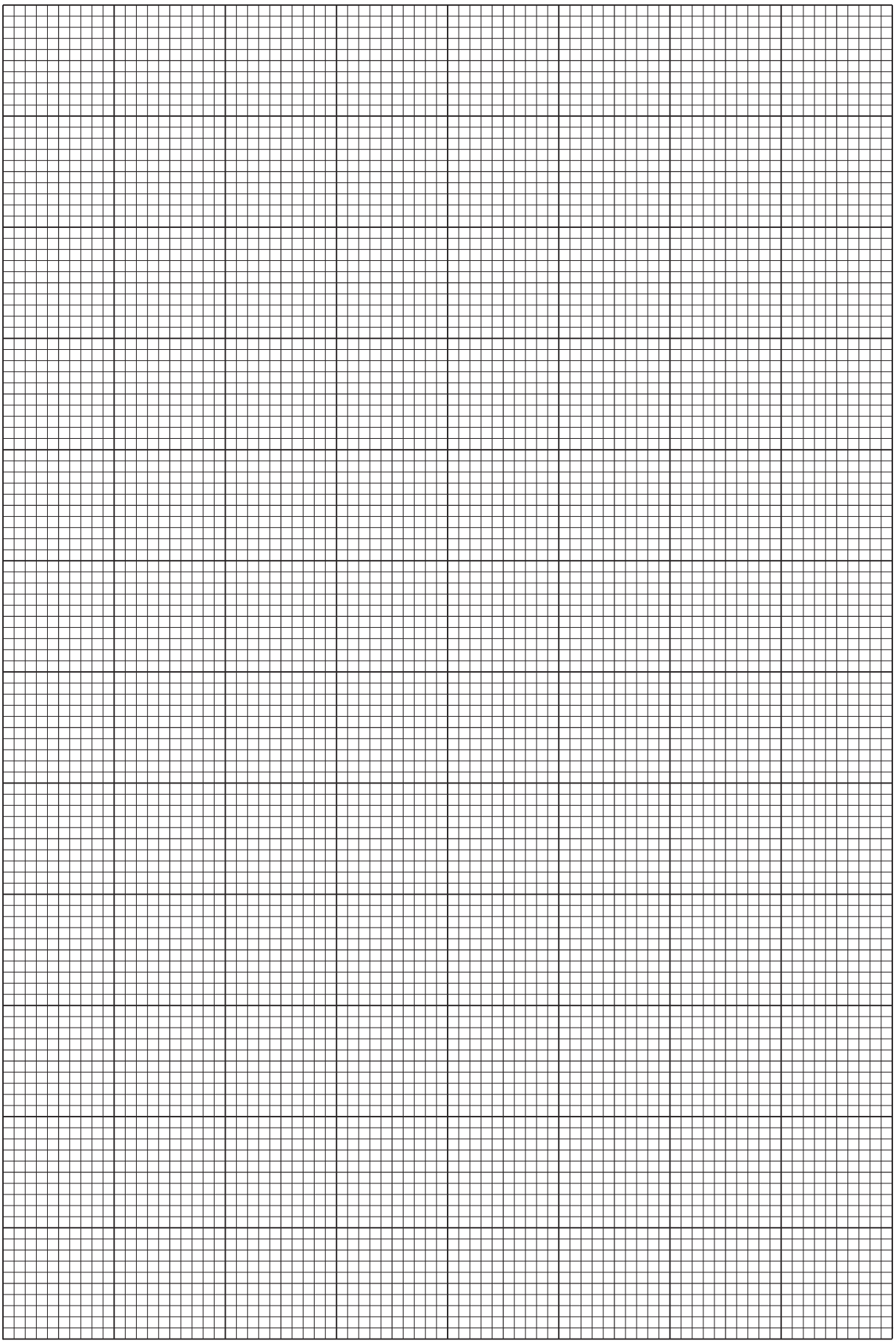

© UCLES 2020

[Turn over

(e) It is suggested that the quantities F and p are related by the equation

$$F = \frac{W}{Q}(p + r) + \frac{S}{Q}$$

where $W = 3.00\,\text{N}$ and Q and S are constants.

Using your answers to **(d)(iii)**, determine values for Q and S.
Give appropriate units.

Q = ...

S = ...
[3]

[Total: 20]

You may not need to use all of the materials provided.

2 In this experiment, you will investigate the oscillations of a square shape.

(a) (i) ● Bend the wire to form a square shape so that the length *L* of each side is approximately 12 cm, as shown in Fig. 2.1.

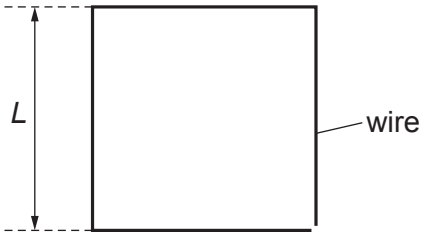

Fig. 2.1

● Use the wire cutters to remove any excess wire.

● Measure and record *L*.

L = ... cm [1]

(ii) Estimate the percentage uncertainty in your value of *L*. Show your working.

percentage uncertainty = ... [1]

(b) (i) ● Place the cork in the clamp and attach the clamp to the stand using the boss.

● Hang the wire square from the pin as shown in Fig. 2.2.

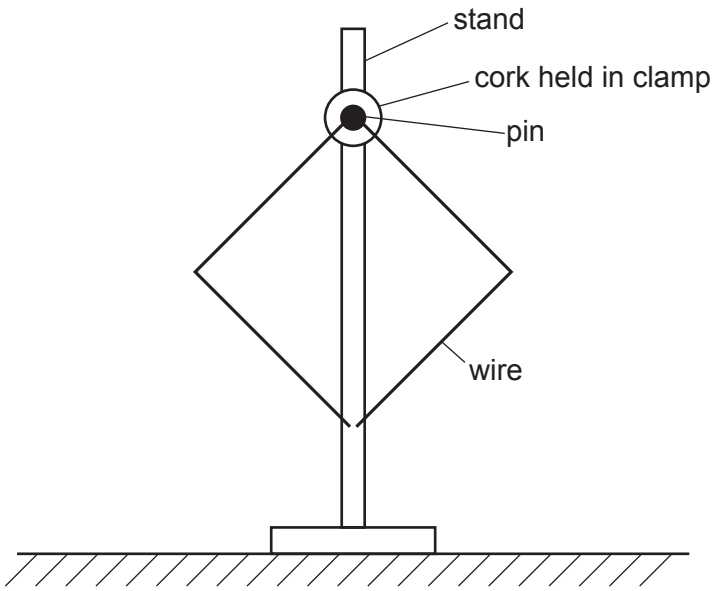

Fig. 2.2

● Gently displace the wire square and release it so that it oscillates as shown in Fig. 2.3.

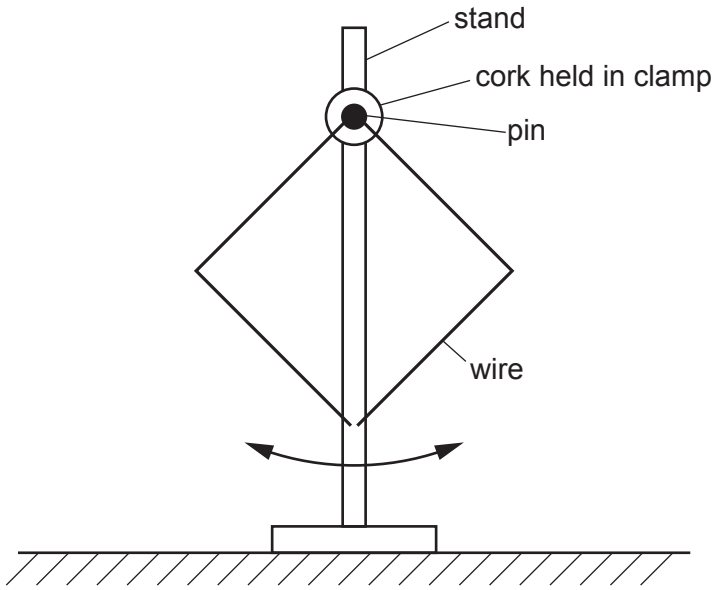

Fig. 2.3

© UCLES 2020

- Determine the period T of the oscillations.

T = ... s [3]

(ii) Calculate T^2.

T^2 = ... s^2 [1]

(iii) Justify the number of significant figures you have given for your value of T^2.

.....

.....

..... [1]

(c)
- Remove the wire square from the pin.
- Form a new square shape from the wire so that L is approximately 6 cm.
- Use the wire cutters to remove the excess wire.
- Measure and record L.

L = ... cm

- Repeat **(b)(i)** and **(b)(ii)**.

T = ... s

T^2 = ... s^2 [2]

(d) It is suggested that the relationship between T and L is

$$T^2 = \frac{L}{k}$$

where k is a constant.

(i) Using your data, calculate two values of k.

first value of k = ...

second value of k = ...
[1]

(ii) Explain whether your results support the suggested relationship.

.....

.....

.....

..... [1]

(e) An approximate value for the acceleration of free fall g is given by

$$g = 46.5k.$$

Use your second value of k to calculate a value for g.

g = ... $m\,s^{-2}$ [1]

© UCLES 2020

(f) **(i)** Describe four sources of uncertainty or limitations of the procedure for this experiment.

1. .....

.....

2. .....

.....

3. .....

.....

4. .....

.....

[4]

(ii) Describe four improvements that could be made to this experiment. You may suggest the use of other apparatus or different procedures.

1. .....

.....

2. .....

.....

3. .....

.....

4. .....

.....

[4]

[Total: 20]

BLANK PAGE

Permission to reproduce items where third-party owned material protected by copyright is included has been sought and cleared where possible. Every reasonable effort has been made by the publisher (UCLES) to trace copyright holders, but if any items requiring clearance have unwittingly been included, the publisher will be pleased to make amends at the earliest possible opportunity.

To avoid the issue of disclosure of answer-related information to candidates, all copyright acknowledgements are reproduced online in the Cambridge Assessment International Education Copyright Acknowledgements Booklet. This is produced for each series of examinations and is freely available to download at www.cambridgeinternational.org after the live examination series.

Cambridge Assessment International Education is part of the Cambridge Assessment Group. Cambridge Assessment is the brand name of the University of Cambridge Local Examinations Syndicate (UCLES), which itself is a department of the University of Cambridge.

© UCLES 2020